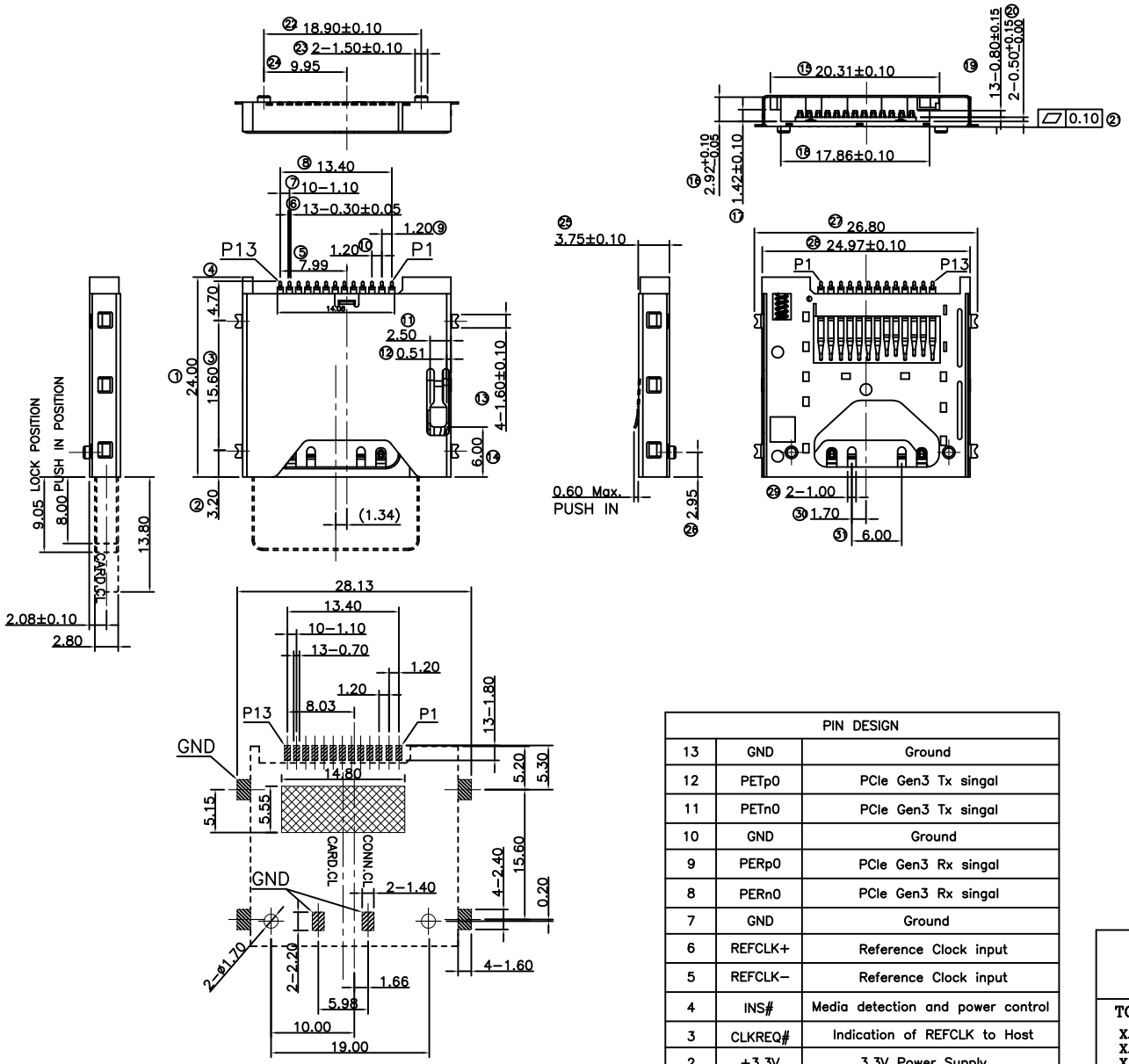


RECOMMENDED P.C.B LAYOUT

TOLERANCE IS: ±0.05

PAD AREA
KEEP OUT AREA
NO COPPER AREA (NO Trace & Via GND)
GND PATTERN ONLY

| PIN DESIGN | | |
|---|---|---|
| 13 | GND | Ground |
| 12 | PETp0 | PCIe Gen3 Tx singal |
| 11 | PETn0 | PCIe Gen3 Tx singal |
| 10 | GND | Ground |
| 9 | PERp0 | PCIe Gen3 Rx singal |
| 8 | PERn0 | PCIe Gen3 Rx singal |
| 7 | GND | Ground |
| 6 | REFCLK+ | Reference Clock input |
| 5 | REFCLK- | Reference Clock input |
| 4 | INS# | Media detection and power control |
| 3 | CLKREQ# | Indication of REFCLK to Host |
| 2 | +3.3V | 3.3V Power Supply |
| 1 | PERST# | PCIe Express function reset |

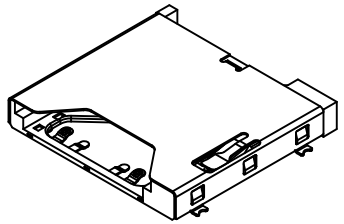

3D VIEW

SPECIFICATION

1.Material:
- Housing: LCP S475, Rated UL94V-0,Color:Black.
- Contacts: C7025 TM03
- Matte Tin 80u"MIN. at Solder Tail,
- Plating 15U" on Contact Area.Over Nickle 50u"MIN.
- Shell: SUS304 1/2H.
- Goldflash at Solder Tail,Over Nickel 30u"MIN.Plated.
- LOCK PIN: SUS304 3/4H. Not Plating.
- SPRING: SWP-B. Not Plating.
- CAM ROD: SUS304H. Not Plating.

2.Electrical Characteristics:
- Rated voltage : 500Vrms AC for 1 min.
- Current rating : 1.0 A.Min.per pin.
- Operating Temperature: -25°C~+85°C.
- Insulation resistance: 1000M ohms Min. at 500VDC for 1ms.
- Dielectric withstanding voltage:500 VAC/1minute.
- Contact resistance: Initial:55m ohms max. Final: Δ40m ohms max.
- Insertion Force: 25N Max.
- Removal Force: 0.5N Min. 20N Max.
- Inverse Insertion: 50N Min.
- Mating cycle: 10000 cycles, Spring is not breaking.

深圳市华宇创精密电子有限公司

HOAUC

| | | | |
|---|---|---|---|
| TOLERANCE: X.X ±0.30, X.XX ±0.25, X.XXX ±0.15, X.° ±2°, X.X° ±0.5° | DRAWED BY : 陈一鸣 | DATE : 2014-02-23 | PART NAME: CF Express Type A PUSH CONN. |
| | CHECKED BY: 马跃 | DATE : 2014-02-23 | PART NO. HYC29-CF13-375 |
| UNIT: mm [inch] | APPROVED BY: 邱敏 | DATE : 2014-02-23 | MOLD NO. / DRAW NO: HYC-2604011052 |
| SCALE:1:1 | SIZE: A4 | | SHEET NO. 1 OF 1 |

www.dzyjzj.com Tel:0755-27575531 Fax:0755-27576267

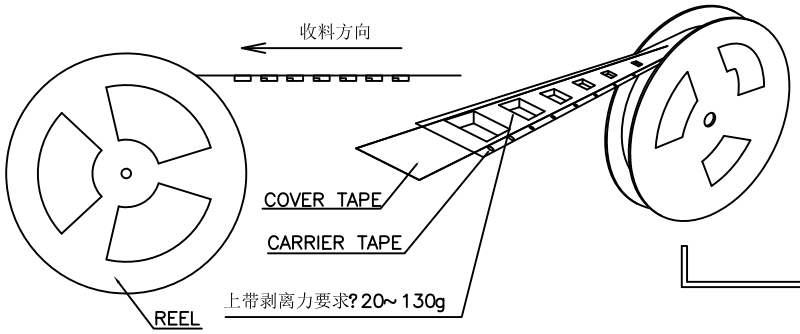


前后空8格不装产品 取料方向

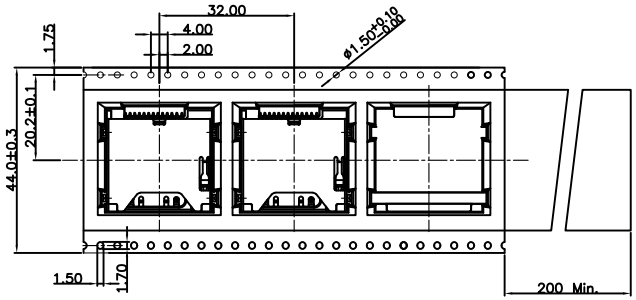


PACKING INFORMATION

| PART NAME | SPECFICTION |
|---|---|
| QUANITY OF PER TRAY | 350PCS/REEL |
| QUANITY OF PER CARTON | 6*350=2100PCS/CARTON |
| TRAY TYPE | ø330X44H |
| CARTON SIZE | 340*340*310 |
| For ocean and air shipping products cover paperboard | |

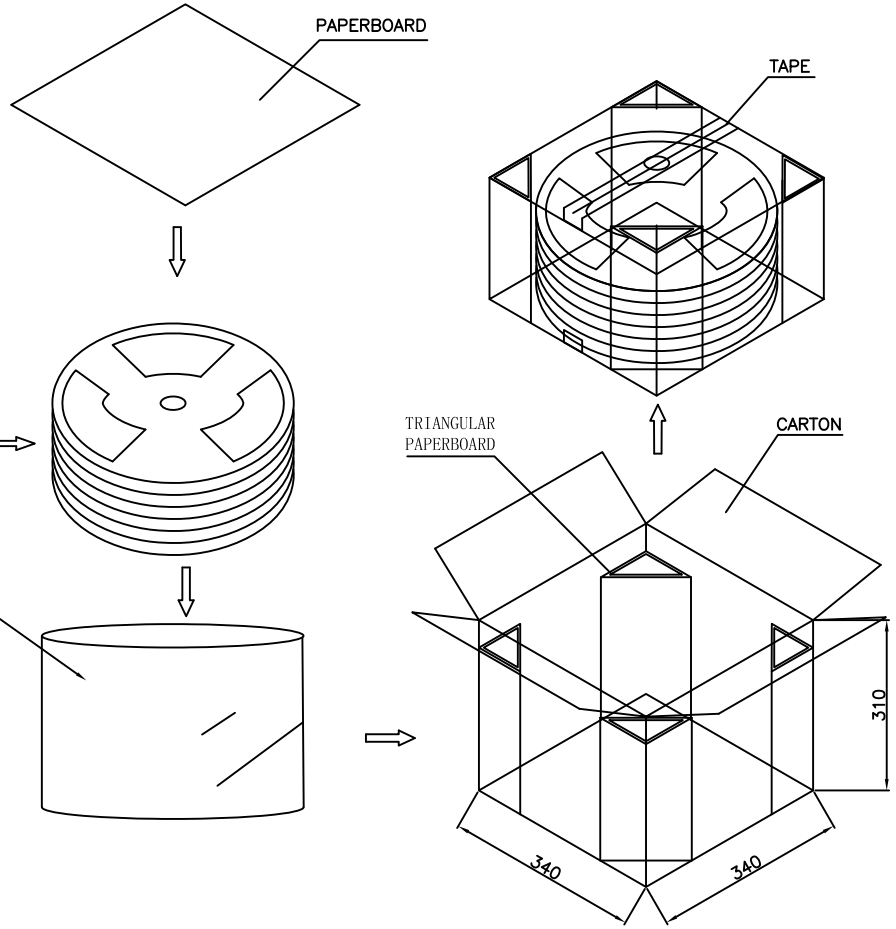


深圳市华宇创精密电子有限公司

| TOLERANCE: | DRAWED BY : 陈一鸣 | DATE : 2014-02-23 | PART NAME: 包装图 | |
|---|---|---|---|---|
| X.X ±0.30<br>X.XX ±0.25<br>X.XXX ±0.15<br>X.° ±2° X.X° ±0.5° | CHECKED BY: 马跃 | DATE : 2014-02-23 | PART NO. | |
| | | | MOLD NO. | |
| UNIT: mm [inch] | APPROVED BY: 邱敏 | DATE : 2014-02-23 | DRAW NO: | |
| SCALE:1:1 SIZE: A4 | | | SHEET NO. | 1 OF 1 |